Appendix C.6.2

Sediment Containment

Perimeter Protection

- Silt Fencing (SC-1)*
- Gravel Bag Berm (SC-6)*
- Fiber Rolls (SC-5)*

Sediment Capture

- Storm Drain Inlet Protection (SC-10)*
- Sediment Trap (SC-3)*
- De-silting Basins (SC-2)*
- Gravelbag Barrier (SC-8)*

Sediment Tracking

- Stabilize Construction Entrances and Exits (TC-1)*
- Construction Road Stabilization (TC-2)
- Entrance/ Outlet Tire Wash (TC-3)*
- Street Sweeping (SC-7)*

Silt Fence

SC-1

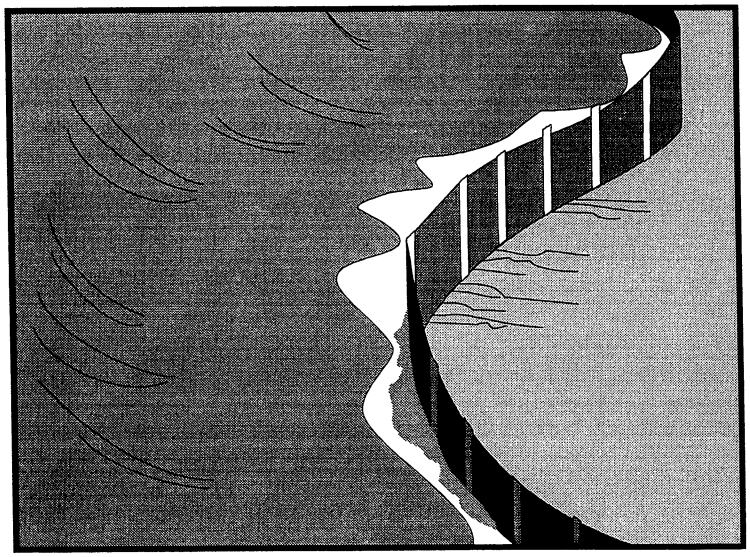

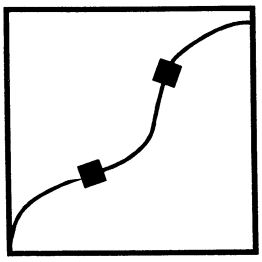

BMP Objectives

- Soil Stabilization
- Sediment Control
- Tracking Control
- Wind Erosion Control
- Non-Storm Water Management
- Materials and Waste Management

Definition and Purpose

A silt fence is a temporary linear sediment barrier of permeable fabric designed to intercept and slow the flow of sediment-laden sheet flow runoff. Silt fences allow sediment to settle from runoff before water leaves the construction site.

Appropriate Applications

Silt fences are placed:

- Below the toe of exposed and erodible slopes.
- Down-slope of exposed soil areas.
- Around temporary stockpiles.
- Along streams and channels.

Limitations

- Not effective unless trenched and keyed in.
- Not intended for use as mid-slope protection on slopes greater than 1:4 (V:H)
- Must be maintained.
- Must be removed and disposed of.

Standards and Specifications

General

- Don't use below slopes subject to creep, slumping, or landslides.
- Don't use in streams, channels, or anywhere flow is concentrated.
- Don't use silt fences to divert flow.

Design and Layout

- The maximum length of slope draining to any point along the silt fence shall be 61 m (200 ft) or less.
- Slope of area draining to fence shall be less than 1:1 (V:H).
- Limit to locations suitable for temporary ponding or deposition of sediment.
- Fabric life span generally limited to between five and eight months. Longer periods may require fabric replacement.
- Silt fences shall not be used in concentrated flow areas.
- Lay out in accordance with Page 5 of this BMP.
- For slopes steeper than 1:2 (V:H) and that contain a high number of rocks or large dirt clods that tend to dislodge, it may be necessary to install additional protection immediately adjacent to the bottom of the slope, prior to installing silt fence. Additional protection may be a chain link fence or a cable fence.
- For slopes adjacent to water bodies or Environmentally Sensitive Areas (ESAs), additional temporary soil stabilization BMPs shall be used.

Materials

- Silt fence fabric shall be woven polypropylene with a minimum width of 900 mm and a minimum tensile strength of 0.45-kN. The fabric shall conform to the requirements in ASTM designation D4632 and shall have an integral reinforcement layer. The reinforcement layer shall be a polypropylene, or equivalent, net provided by the manufacturer. The permittivity of the fabric shall be between 0.1 sec^{-1} and 0.15 sec^{-1} in conformance with the requirements in ASTM designation D4491.
- Wood stakes shall be commercial quality lumber of the size and shape shown on the plans. Each stake shall be free from decay, splits or cracks longer than the thickness of the stake or other defects that would weaken the stakes and cause the stakes to be structurally unsuitable.
- Staples used to fasten the fence fabric to the stake shall be not less than 45mm (1.77 in.) long and shall be fabricated from 1.57mm (0.06in.) or heavier. The wire used to fasten the tops of the stakes together joining 2 sections of fence shall be 3.05 mm (0.12in) or heavier wire. Galvanizing of the fastening wire will not be required.

* Altered by D-MAX Engineering, Inc.

Installation

- Generally, silt fences shall be used in conjunction with soil stabilization source controls up slope to provide effective control.
- Trenches shall not be excavated wider and deeper than necessary for proper installation of the temporary linear sediment barriers.
- Excavation of the trenches shall be performed immediately before installation of the temporary linear sediment barriers.
- Construct silt fences with a set-back of at least 1m (3.3ft) from the toe of a slope. Where a silt fence is determined to be not practicable due to specific site conditions, the silt fence may be constructed at the toe of the slope, but shall be constructed as far from the toe of the slope as practicable.
- Construct the length of each reach so that the change in base elevation along the reach does not exceed 1/3 the height of the barrier; in no case shall the reach exceed 150 meters.
- Cross barriers shall be a minimum of 1/3 and a maximum of 1/2 the height of the linear barrier.
- Bottom of the silt fence shall be keyed-in.
- Install in accordance with Page 5 of this BMP.

Maintenance and Inspection

- Repair undercut silt fences.
- Repair or replace split, torn, slumping, or weathered fabric.
- Inspect silt fence when rain is forecast. Perform necessary maintenance, or maintenance required by the Resident Engineer (RE).
- Inspect silt fence following rainfall events. Perform maintenance as necessary, or as required by the RE.
- Maintain silt fences to provide an adequate sediment holding capacity. Sediment shall be removed when the sediment accumulation reaches one-third (1/3) of the barrier height. Removed sediment shall be incorporated in the project at locations designated by the RE or disposed of outside the highway right-of-way in conformance with the Standard Specifications.
- Silt fences that are damaged and become unsuitable for the intended purpose, as determined by the RE, shall be repaired.

* Altered by D-MAX Engineering, Inc.

- Holes, depressions or other ground disturbance caused by the removal of the temporary silt fences shall be backfilled and repaired in conformance with the Standard Specifications.
- Remove silt fence when no longer needed or as required by the RE. Fill and compact post holes and anchorage trench, remove sediment accumulation, and grade fence alignment to blend with adjacent ground.

Silt Fence*

SC-1

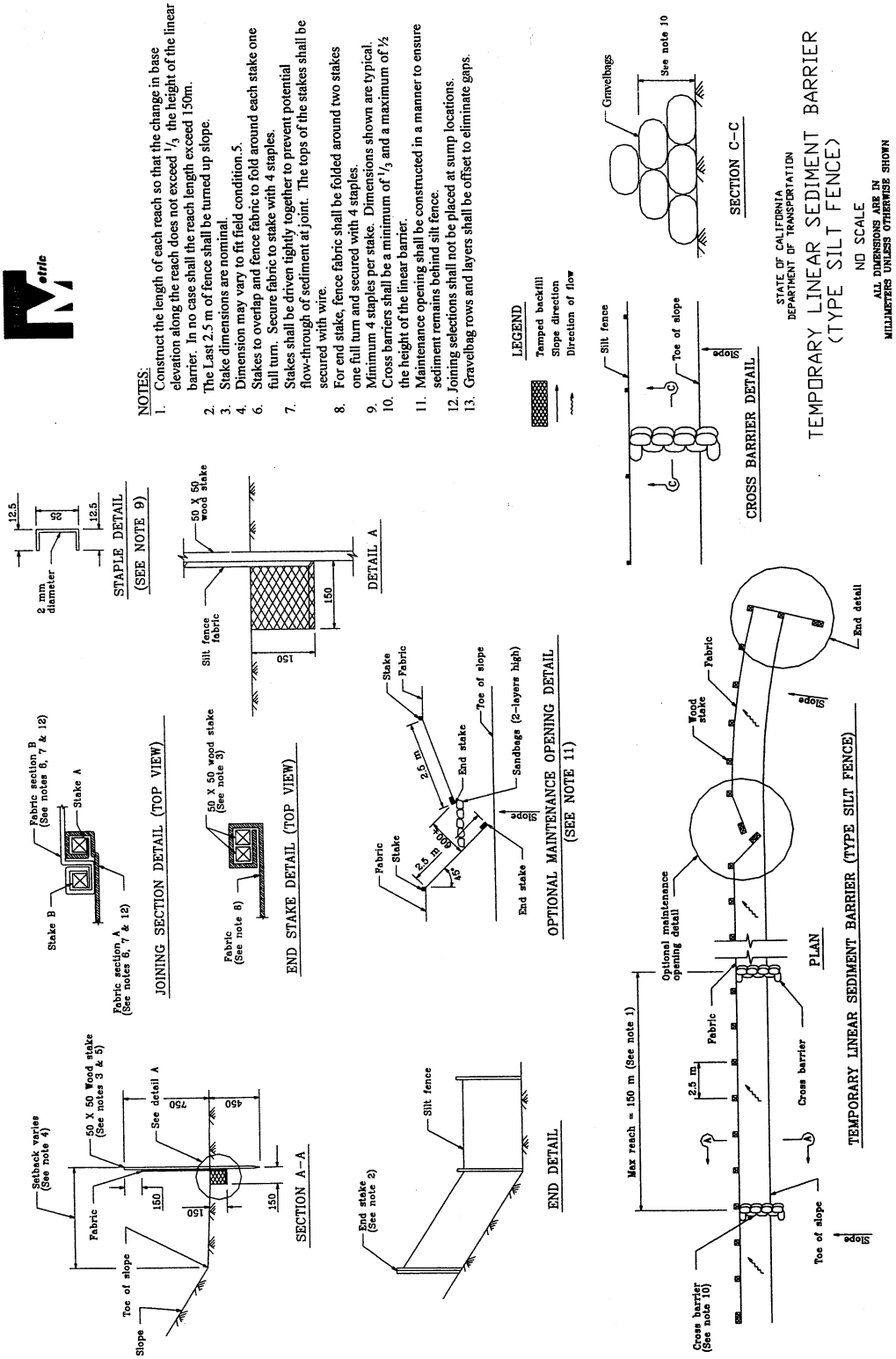

* Altered by D-MAX Engineering, Inc.

Gravel Bag Berm *

SC-6

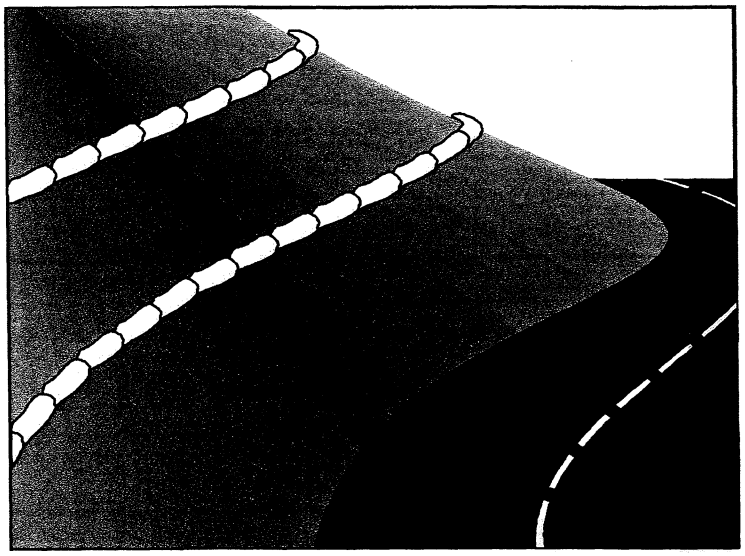

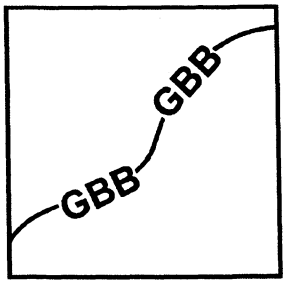

BMP Objectives

- Soil Stabilization
- Sediment Control
- Tracking Control
- Wind Erosion Control
- Non-Storm Water Management
- Materials and Waste Management

Definition and Purpose

A gravel bag berm consist of a single row of gravel bags that are installed end-to-end to form a barrier across a slope to intercept runoff, reduce runoff velocity, release runoff as sheet flow, and provide some sediment removal.

Appropriate Applications

- Along the face and at grade breaks of exposed and erodible slopes to shorten slope length and spread runoff as sheet flow.
- BMP may be implemented on a project-by-project basis with other BMPs when determined necessary and feasible by the Design Engineer and approved by the city engineer.

Limitations

- Although this BMP will remove some sediment, it is not to be used in place of a linear sediment barrier (i.e., a silt fence, gravelbag barrier, or straw bale barrier).
- Degraded gravel bags may rupture when removed, spilling contents.
- Installation can be labor intensive.
- Limited durability for long term projects.

Standards and Specifications

Materials

- ***Bag Material:*** Bags shall be woven polypropylene, polyethylene or polyamide fabric or burlap, minimum unit weight 135 g/m^2 (four ounces per square yard), mullen burst strength exceeding 2,070 kPa (300 psi) in conformance with the requirements in ASTM designation D3786, and ultraviolet stability exceeding 70 percent in conformance with the requirements in ASTM designation D4355.

* Altered by D-MAX Engineering, Inc.

- *Bag Size:* Each gravel-filled bag shall have a length of 450 mm (18 in), width of 300 mm (12 in), thickness of 75 mm (3 in), and mass of approximately 15 kg (33 lb). Bag dimensions are nominal, and may vary based on locally available materials. Alternative bag sizes shall be submitted to the Resident Engineer (RE) for approval prior to deployment.

Installation

- Install along a level contour.
- Tightly abut bags

Maintenance and Inspection

- Inspect gravel bag berms before and after each rainfall event, and weekly throughout the rainy season.
- Reshape or replace gravel bags as needed, or as directed by the RE.
- Repair washouts or other damages as needed, or as directed by the RE.
- Inspect gravel bag berms for sediment accumulations and remove sediments when accumulation reaches one-third of the berm height.
- Remove gravel bag berms when no longer needed. Remove sediment accumulation, and clean, re-grade, and stabilized the area.

* Altered by D-MAX Engineering, Inc.

Fiber Rolls *

SC-5

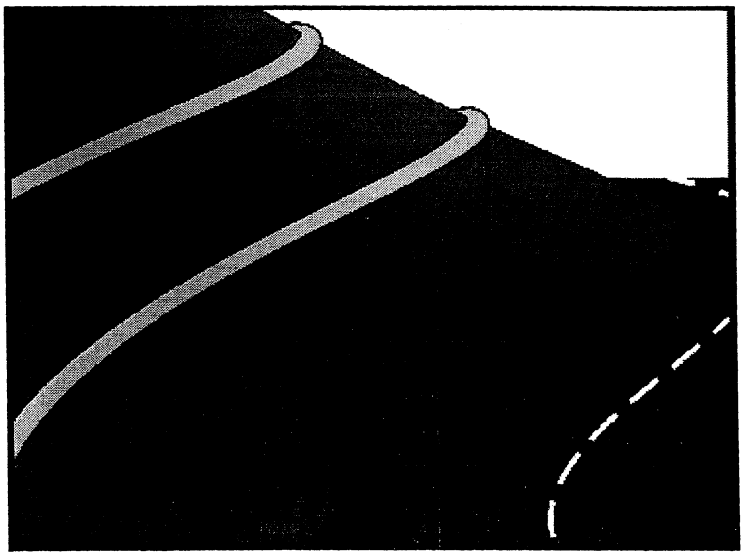

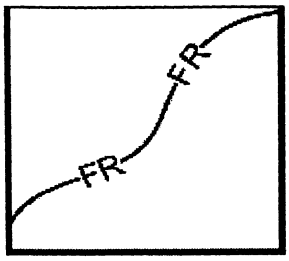

BMP Objectives

- Soil Stabilization
- Sediment Control
- Tracking Control
- Wind Erosion Control
- Non-Storm Water Management
- Materials and Waste Management

Definition and Purpose

A fiber roll consists of straw, flax, or other similar materials that are rolled and bound into a tight tubular roll and placed on the face of slopes at regular intervals to intercept runoff, reduce its flow velocity, release the runoff as sheet flow, and provide some removal of sediment from the runoff.

Appropriate Applications

- May be used along the top, face, and at grade breaks of exposed and erodible slopes to shorten slope length and spread runoff as sheet flow.
- This BMP may be implemented on a project-by-project basis with other BMPs when determined necessary and feasible by the RE.

Limitations

- Is a relatively new sediment control/soil stabilization technology. Effectiveness and capabilities in the field are not completely known.
- Although fiber rolls provide some sediment removal, this BMP is not to be used in place of a linear sediment barrier (i.e., a silt fence, gravelbag barrier, or rice straw bale barrier).

Standards and Specifications

Fiber Roll Materials

- Fiber rolls shall be either:

  (1) prefabricated rolls; or,

  (2) rolled tubes of erosion control blanket.

* Altered by D-MAX Engineering, Inc.

Assembly of Field Rolled Fiber Roll

- Roll length of erosion control blanket into a tube of minimum 200 mm (8 in) diameter.
- Bind roll at each end and every 1.2 m (4 ft) along length of roll with jute-type twine.

Installation

- Locate fiber rolls on level contours spaced 2.4 to 6.0 m (8 to 20 ft) along the face of slope, or as required by the RE.
- Stake fiber rolls into a 50 to 100 mm (2 to 4 in) trench.
- Drive stakes at the end of each fiber roll and spaced 1.2 m (4 ft) maximum on center.
- Use wood stakes with a nominal classification of 19 by 19 mm (3/4 by 3/4 in), and minimum length of 600mm (24 in).
- If more than one fiber roll is placed in a row, the rolls shall be butted; not overlapped.

Removal

- Fiber rolls are typically left in place.
- If fiber rolls are removed, collect and dispose of sediment accumulation, and fill and compact holes, trenches, depressions or any other ground disturbance to blend with adjacent ground.

Maintenance and Inspection

- Repair or replace split, torn, unraveling, or slumping fiber rolls.
- Inspect fiber rolls when rain is forecast. Perform maintenance as needed or as required by the RE.
- Inspect fiber rolls following rainfall events and a least daily during prolonged rainfall. Perform maintenance as needed or as required by the RE.

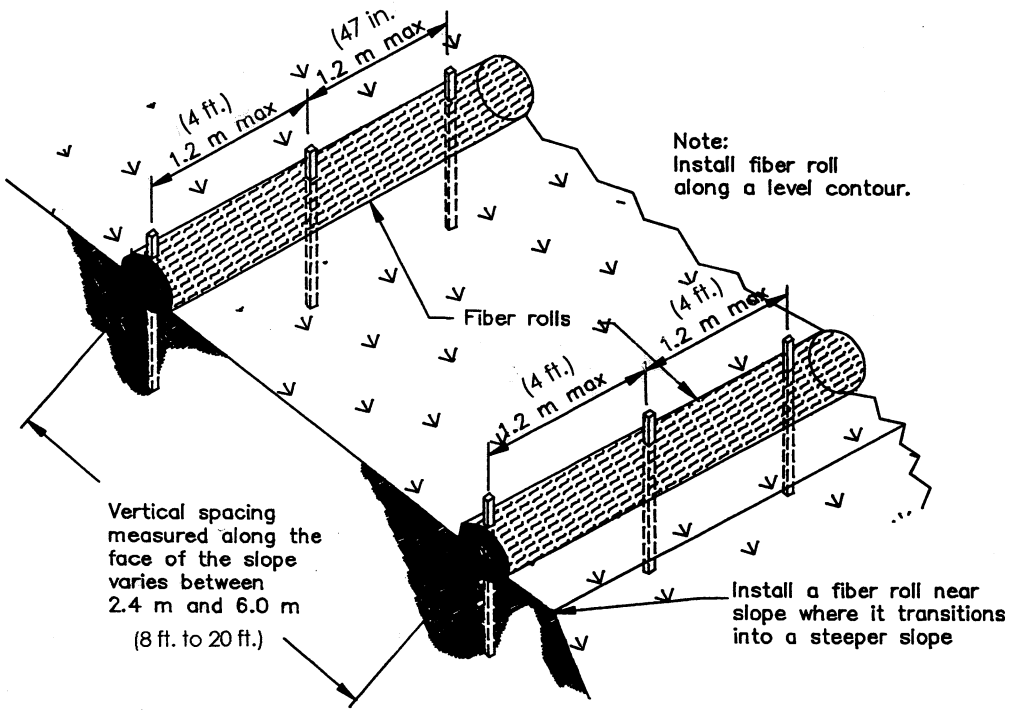

TYPICAL FIBER ROLL INSTALLATION

N.T.S.

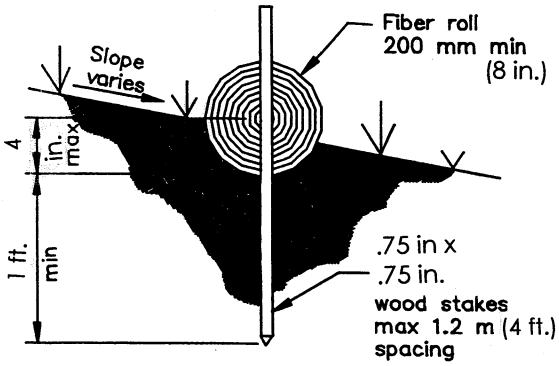

ENTRENCHMENT DETAIL

N.T.S.

* Altered by D-MAX Engineering, Inc.

Storm Drain Inlet Protection

SC-10

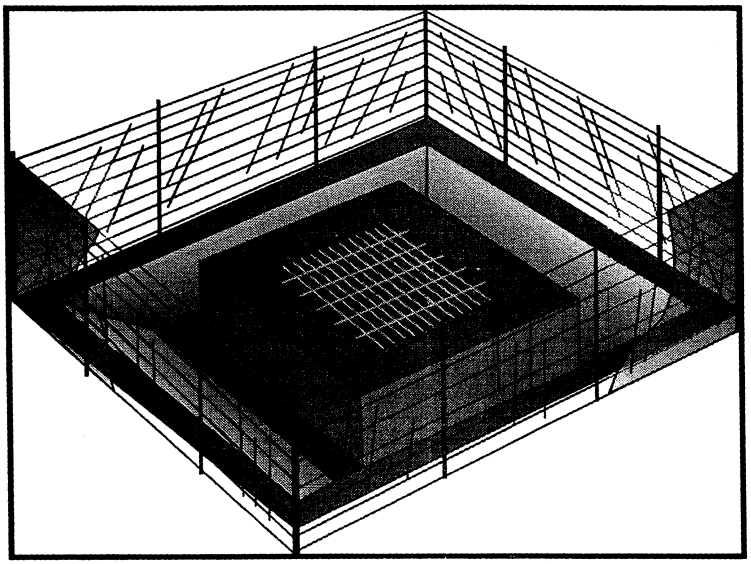

BMP Objectives

- Soil Stabilization
- Sediment Control
- Tracking Control
- Wind Erosion Control
- Non-Storm Water Management
- Materials and Waste Management

Definition and Purpose

Devices used at storm drain inlets that are subject to runoff from construction activities to detain and/or to filter sediment-laden runoff to allow sediment to settle and/or to filter sediment prior to discharge of storm water into storm water drainage systems or watercourses.

Appropriate Applications

- Where ponding will not encroach into highway traffic.
- Where sediment laden surface runoff may enter an inlet.
- Where disturbed drainage areas have not yet been permanently stabilized.
- Where the drainage area is 0.4 ha (1 ac) or less.
- Appropriate during wet and snow-melt seasons.

Limitations

- Use only when ponding will not encroach into highway traffic or onto erodible surfaces and slopes. If safety is a concern, use other methods of temporary protection to prevent sediment-laden storm water and non-storm water discharges to enter the storm drain system.
- Sediment removal may be difficult in high flow conditions or if runoff is heavily sediment laden. If high flow conditions are expected, use other on-site sediment trapping techniques in conjunction with inlet protection.
- Frequent maintenance is required.
- For drainage areas larger than 0.4 ha (1ac), runoff shall be routed to a sediment trapping device designed for larger flows. See BMPs SC-2, "Desilting Basin", and SC-3 "Sediment Traps".

- Filter fabric fence inlet protection appropriate in open areas is subject to sheet flow and for flows not exceeding 0.014 m^3/s (0.5 cfs).
- Gravelbag barriers for inlet protection are applicable when sheet flows or concentrated flows exceed 0.014 m^3/s (0.5 cfs), and it is necessary to allow for overtopping to prevent flooding.
- Excavated drop inlet sediment traps are appropriate where relatively heavy flows are expected and overflow capability is needed.

Standards and Specifications

Identify existing and/or planned storm drain inlets that have the potential to receive sediment-laden surface runoff. Determine if storm drain inlet protection is needed, and which method to use.

Methods and Installation

- ***DI Protection Type 1 - Filter Fabric Fence*** - The filter fabric fence (Type 1) protection is illustrated in Page 4. Similar to constructing a silt fence. See BMP SC-1, "Silt Fence". Do not place filter fabric underneath the inlet grate since the collected sediment may fall into the drain inlet when the fabric is removed or replaced.
- ***DI Protection Type 2 - Excavated Drop Inlet Sediment Trap*** - The excavated drop inlet sediment trap (Type 2) is illustrated in Page 5. Similar to constructing a temporary silt fence, See BMP SC-1, "Silt Fence". Size excavated trap to provide a minimum storage capacity calculated at the rate of 130 m^3/ha (67 yd^3/ac) of drainage area.
- ***DI Protection Type 3 - Gravelbag Barrier*** - The gravelbag barrier (Type 3) is illustrated in Page 6. Flow from a severe storm shall not overtop the curb. In areas of high clay and silts, use filter fabric and gravel as additional filter media. Construct sandbags in accordance with BMP SC-8, "Gravelbag Barrier".

Maintenance and Inspection

General

- Inspect all inlet protection devices before and after every rainfall event, and weekly during the rest of the rainy season. During extended rainfall events, inspect inlet protection devices at least once every 24 hours.
- Inspect the storm drain inlet after severe storms in the rainy season to check for bypassed material.
- Remove all inlet protection devices within thirty days after the site is stabilized, or when the inlet protection is no longer needed.

* Altered by D-MAX Engineering, Inc.

- Bring the disturbed area to final grade and smooth and compact it. Appropriately stabilize all bare areas around the inlet.
- Clean and re-grade area around the inlet and clean the inside of the storm drain inlet as it must be free of sediment and debris at the time of final inspection.

Requirements by Method

• • ***Type 1 - Filter Fabric Fence***

- Make sure the stakes are securely driven in the ground and are in good shape (i.e., not bent, cracked, or splintered, and are reasonably perpendicular to the ground). Replace damaged stakes.
- Replace or clean the fabric when the fabric becomes clogged with sediment. Make sure the fabric does not have any holes or tears. Repair or replace fabric as needed or as directed by the Resident Engineer (RE).
- At a minimum, remove the sediment behind the fabric fence when accumulation reaches one-third the height of the fence or barrier height.

• • ***Type 2 - Excavated Drop Inlet Sediment Trap***

- Remove sediment from basin when the volume of the basin has been reduced by one-half.

• • ***Type 3 - Gravelbag Barrier***

- Inspect bags for holes, gashes, and snags.
- Check gravelbags for proper arrangement and displacement. Remove the sediment behind the barrier when it reaches one-third the height of the barrier.

* Altered by D-MAX Engineering, Inc.

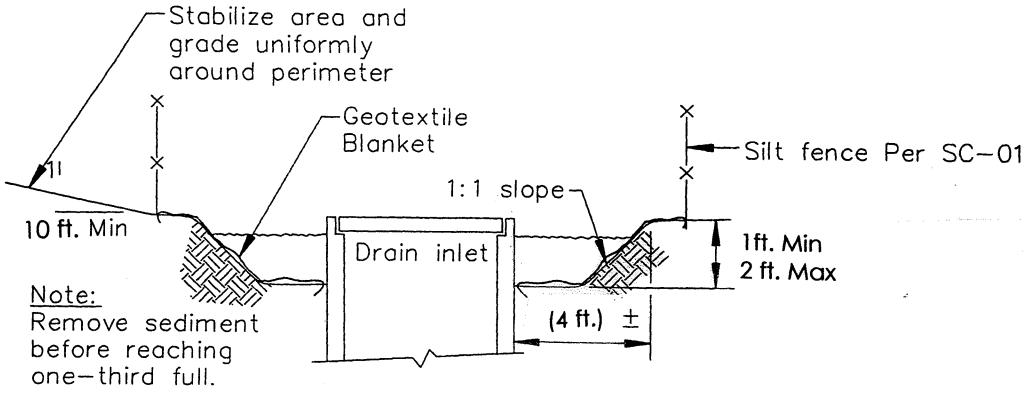

Section A-A

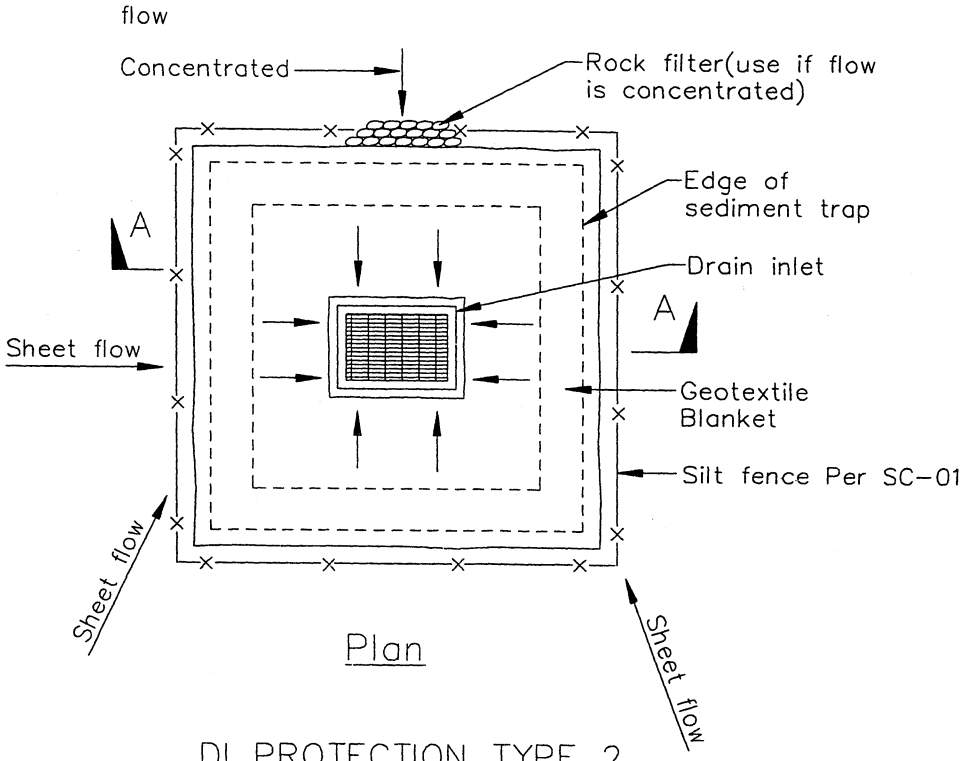

Plan

DI PROTECTION TYPE 2
NOT TO SCALE

Notes
1. For use in cleared and grubbed and in graded areas.
2. Shape basin so that longest inflow area faces longest length of trap.
3. For concentrated flows, shape basin in 2:1 ratio with length oriented towards direction of flow.

* Altered by D-MAX Engineering, Inc.

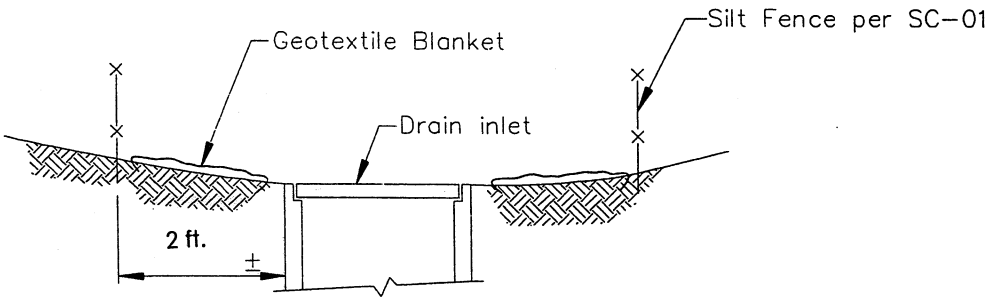

SECTION A–A

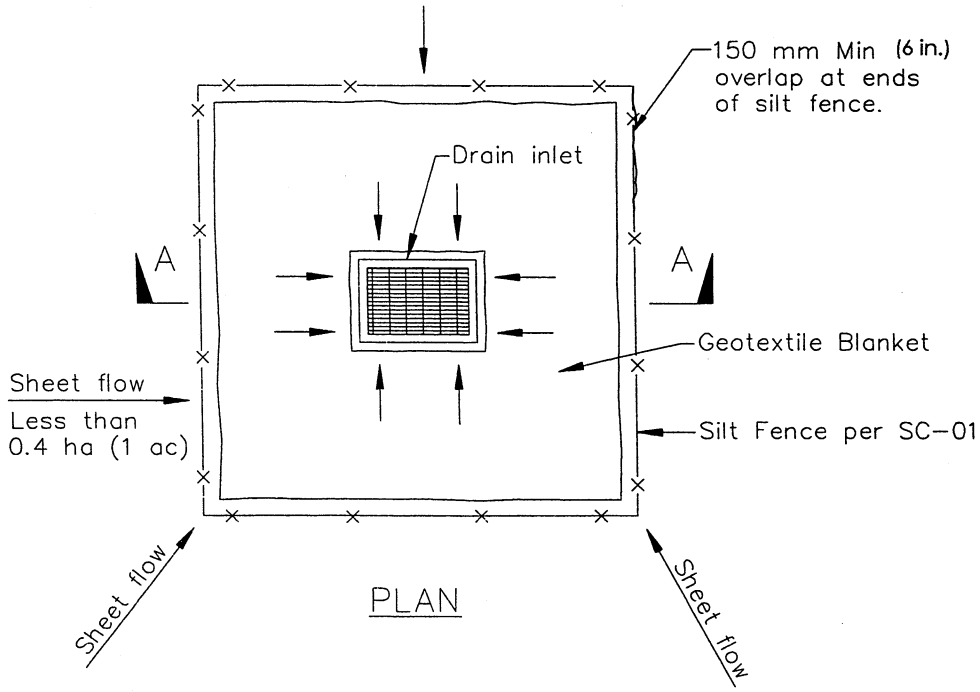

PLAN

DI PROTECTION TYPE 1
NOT TO SCALE

NOTES:

1. For use in areas where grading has been completed and final soil stabilization and seeding are pending.
2. Not applicable in paved areas.
3. Not applicable with concentrated flows.

* Altered by D-MAX Engineering, Inc.

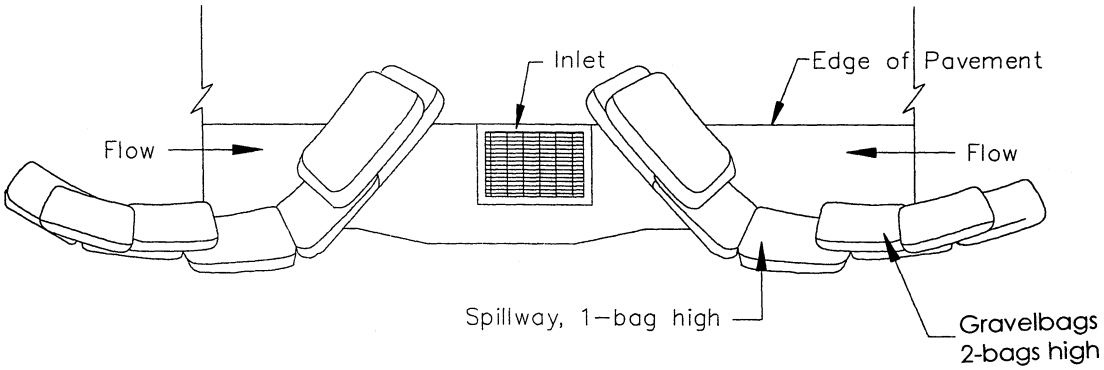

TYPICAL PROTECTION FOR INLET ON SUMP

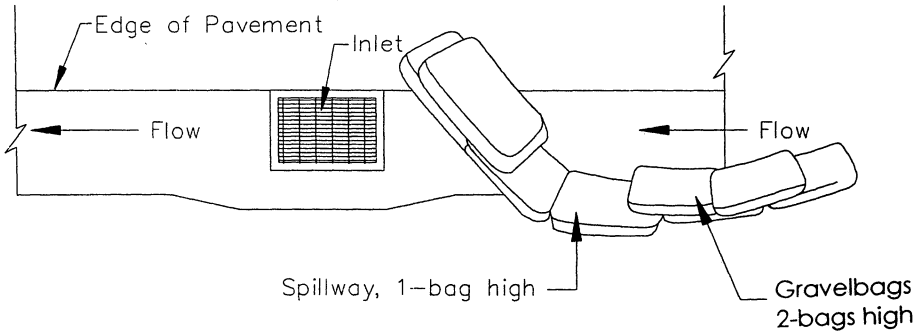

TYPICAL PROTECTION FOR INLET ON GRADE

Notes:

1. Intended for short-term use.
2. Use to inhibit non-storm water flow.
3. Allow for proper maintenance and cleanup.
4. Bags must be removed after adjacent operation is complete.
5. Not applicable in areas with high silts and clays without filter fabric.
6. The method may only be used when it does not adversely effect pedestrian or vehicular traffic.

* Altered by D-MAX Engineering, Inc.

Sediment Trap

SC-3

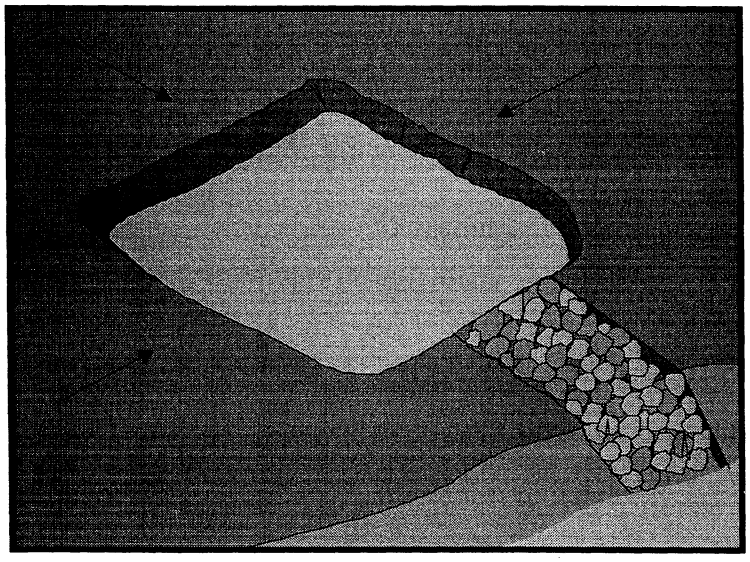

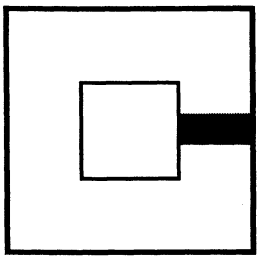

BMP Objectives
- Soil Stabilization
- Sediment Control
- Tracking Control
- Wind Erosion Control
- Non-Storm Water Management
- Materials and Waste Management

Definition and Purpose

A sediment trap is a temporary basin with a controlled release structure, formed by excavating or constructing an earthen embankment across a waterway or low drainage area.

Appropriate Applications

- Sediment traps may be used on construction projects during the rainy season where the contributing drainage area is less than 2 ha (5acres). Traps would be placed where sediment laden storm water may enter a storm drain or watercourse, and around and/or up-slope from storm drain inlet protection measures.
- This BMP may be implemented on a project-by-project basis in addition to other BMPs when determined necessary and feasible by the Resident Engineer (RE).
- As a supplemental control, sediment traps provide additional protection for a water body or for reducing sediment before it enters a drainage system.

Limitations

- Requires large surface areas to permit settling of sediment.
- Not appropriate for drainage areas greater than 2 ha (5 ac).
- Only removes large and medium sized particles and requires upstream erosion control.
- Attractive and dangerous to children, requiring protective fencing.
- Not to be located in live streams.
- Size may be limited by availability of right-of-way.

Sediment Trap *

SC-3

Standards and Specifications

- Construct sediment traps prior to rainy season and construction activities.
- Trap shall be located: (1) by excavating a suitable area or where a low embankment can be constructed across a swale, (2) where failure would not cause loss of life or property damage, and (3) to provide access for maintenance, including sediment removal and sediment stockpiling in a protected area.
- Trap shall be sized to accommodate a settling zone and sediment storage zone with recommended minimum volumes of 130 m^3/ha (67 yd^3/ac) and 65 m^3/ha (33 yd^3/ac) of contributing drainage area, respectively, based on 12.7 mm (0.5 in) of runoff volume over a 24-hr period. Multiple traps and/or additional volume may be required to accommodate site specific rainfall and soil conditions.
- Traps with an impounding levee greater than 1.5 m tall, measured from the lowest point to the impounding area to the highest point of the levee, and traps capable of impounding more then 1000 cubic meters (m^3), shall be designed by the professional Civil Engineer registered with the state of California. The design must be submitted to the Resident Engineer (RE) for approval. The design shall include maintenance requirements, including sediment and vegetation removal to ensure public safety, continuous function of the trap outlet and bypass structures.
- Trap length to width ratio shall be greater than 3:1 (L:W) or baffles are required to prevent short circuiting of the inlet flow.
- Trap inlets shall be located to maximize the travel distance to the trap outlet. Use rock or vegetation to protect the trap outlets against erosion.
- To dewater the trap, the outlet shall be constructed in one of the following two ways:

  (1) Use corrugated metal, high density polyethylene (HDPE), or reinforced concrete riser pipe with dewatering holes encased in gravel to prevent floating debris from flowing out of the trap or obstructing the system (See Figure1).

  (2) Construct a crushed stone outlet section of the embankment at the low point of the trap (See Figure 2). The stone section serves as a non-erosive spillway outlet for flood flows and the bottom section provides a means of dewatering the trap between rainfall events.

* Altered by D-MAX Engineering, Inc.

Maintenance and Inspection

- Inspect sediment traps before and after rainfall events and weekly during the rest of the rainy season. During extended rainfall events, inspect sediment traps at least every 24 hours.
- Check trap banks for seepage and structural soundness.
- Check outlet structure and spillway for any damage or obstructions. Repair damage and remove obstructions as needed or as directed by the RE.
- Check outlet area for erosion and stabilize if required, or as directed by the RE.
- Remove accumulated sediment when the volume has reached one-third the original trap volume.
- Properly disposed of sediment and debris removed from the trap.
- Check fencing for damage and repair as needed or as directed by the RE.

* Altered by D-MAX Engineering, Inc.

Sediment Trap*

SC-3

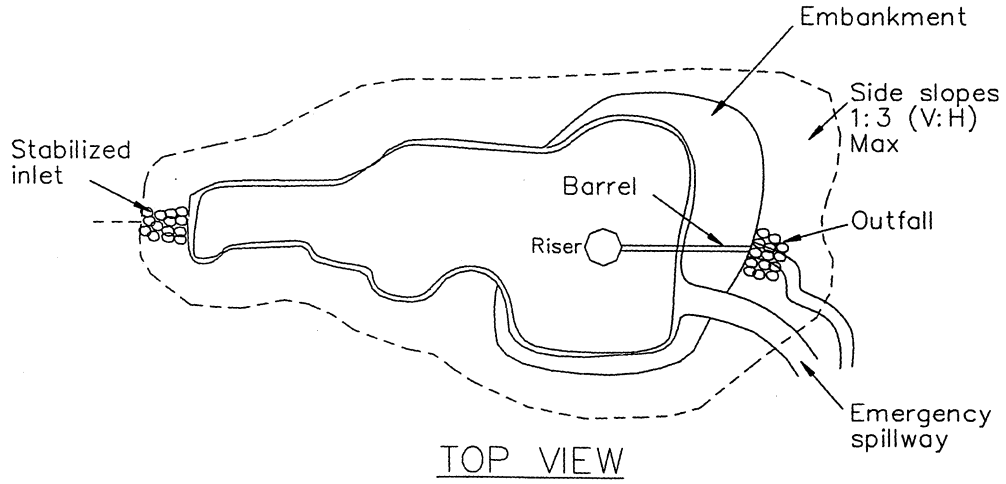

TOP VIEW

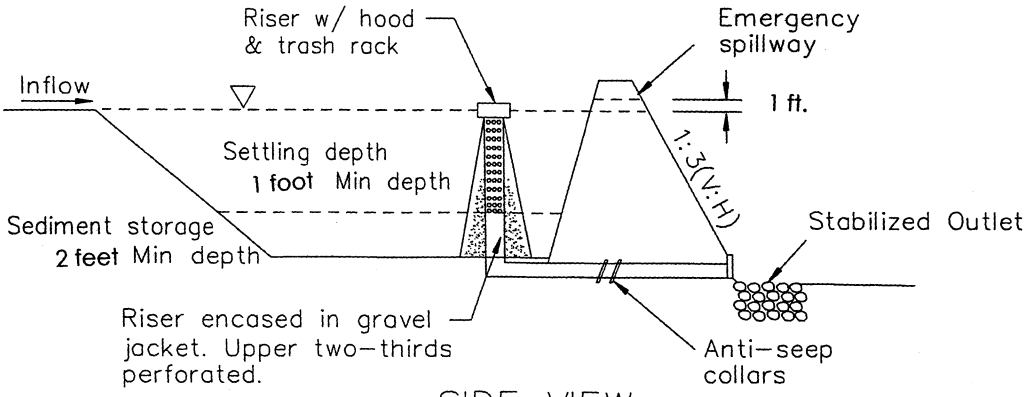

SIDE VIEW

Notes:

1. Typical trap design shown will handle 12.7mm (0.5 in.) of runoff over a 24 hour period.
2. Setting volume 130 m^3 per hactare (1858 ft^3 per acre) of drainage area.
3. Sediment storage volume: 65 m^3 per hectare (929 ft^3 per acre) of drainage area.

TYPICAL SEDIMENT TRAP
NOT TO SCALE

FIGURE 1

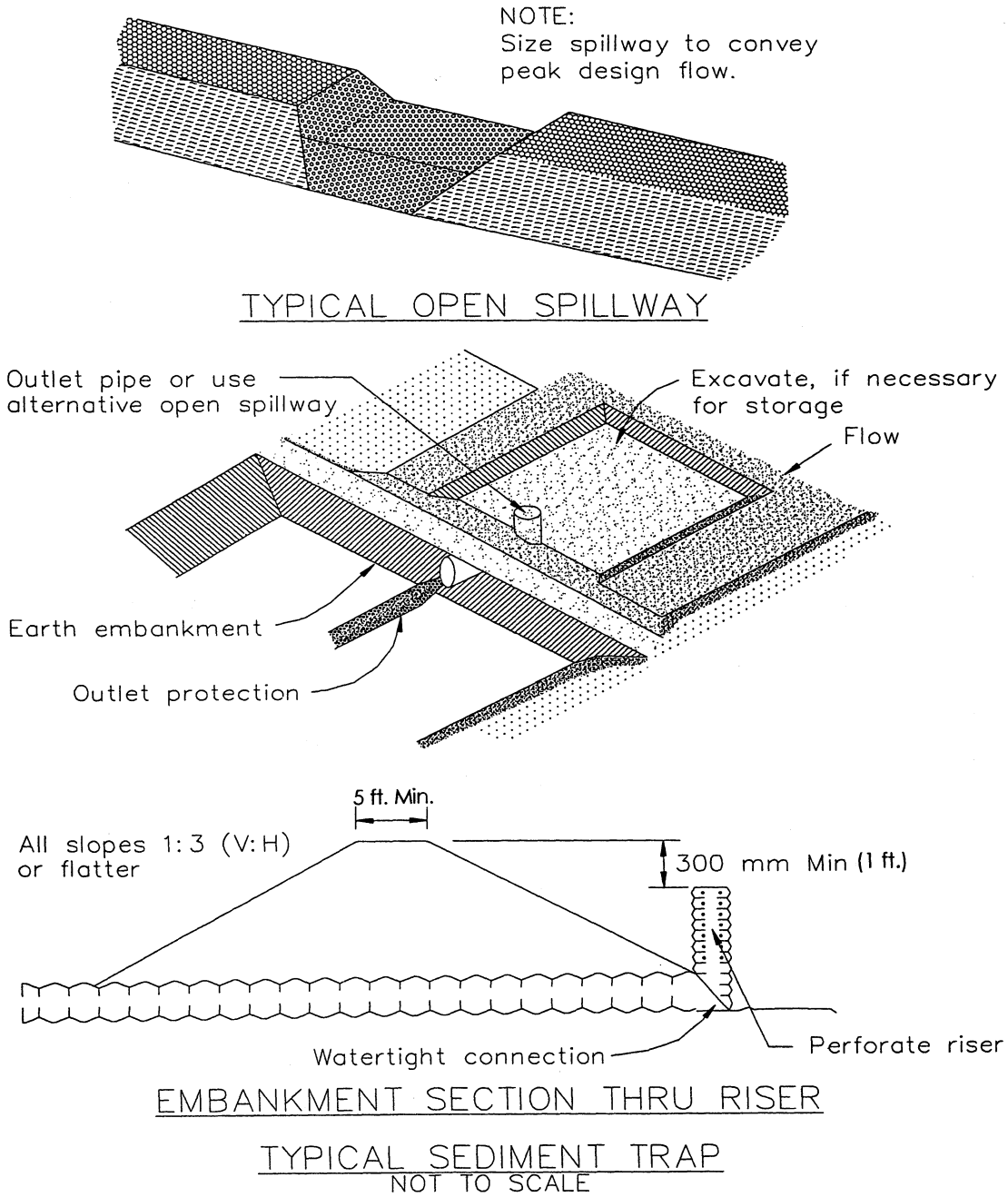
NOTE:
Size spillway to convey peak design flow.
TYPICAL OPEN SPILLWAY
Outlet pipe or use alternative open spillway
Excavate, if necessary for storage
Flow
Earth embankment
Outlet protection
5 ft. Min.
All slopes 1:3 (V:H) or flatter
300 mm Min (1 ft.)
Watertight connection
Perforate riser
EMBANKMENT SECTION THRU RISER
TYPICAL SEDIMENT TRAP
NOT TO SCALE

FIGURE 2

Desilting Basin

SC-2

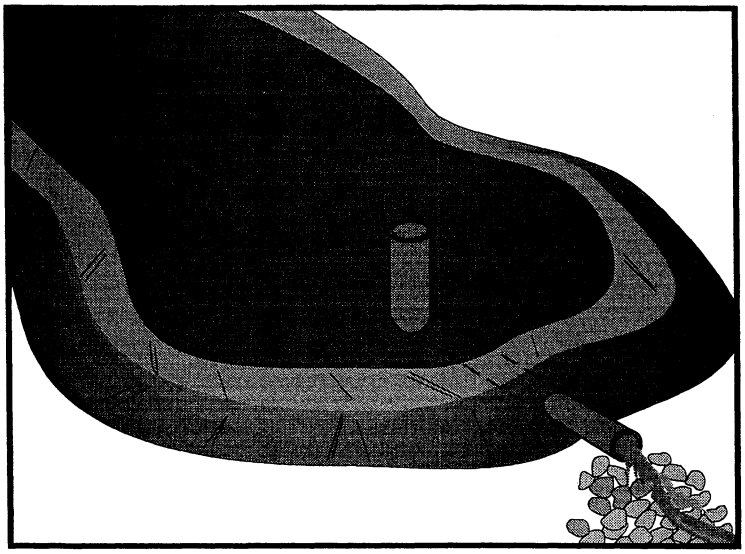

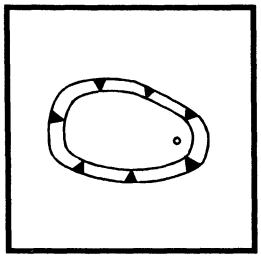

BMP Objectives

- ○ Soil Stabilization
- ● Sediment Control
- ○ Tracking Control
- ○ Wind Erosion Control
- ○ Non-Storm Water Management
- ○ Materials and Waste Management

Definition and Purpose

A desilting basin is a temporary basin formed by excavation and/or constructing an embankment so that sediment-laden runoff is temporarily detained under quiescent conditions, allowing sediment to settle out before the runoff is discharged.

Appropriate Applications

Desilting basins shall be considered for use:

- On construction projects with disturbed areas during the rainy season; and
- Where sediment-laden water may enter the drainage system or watercourses; and
- At outlets of disturbed soil areas with areas between 2 ha and 4 ha (5ac and 10 ac).

Limitations

- Alternative BMPs must be thoroughly investigated for erosion control before selecting temporary desilting basins.
- Requires large surface areas to permit settling of sediment.
- Not appropriate for drainage areas greater than 30 ha (75 ac).
- Not to be located in live streams
- If safety is a concern, basins may require protective fencing.
- Size may be limited by availability of right-of-way.

Standards and Specifications

- Limit the contributing area to the desilting basin to only the runoff from the disturbed soil areas. Use temporary concentrated flow conveyance controls to divert runoff from undisturbed areas away from the desilting basin.
- Desilting basins shall be designed to have a capacity equivalent to 100 cubic meters of storage (as measured from the top of the basin to the principal outlet,) per hectare of contributory area. This design is less than the required to capture the 0.01 mm particle size but larger than that required to capture particles 0.02 mm or larger.
- The length of the basin shall be more than twice the width of the basin; the length shall be determined by measuring the distance between the inlet and the outlet.
- The depth must be no less than 1m (3.3ft) nor greater than 1.5m (4.9ft.)
- Basins with an impounding levee greater than 1.5 m tall, measured from the lowest point to the impounding area to the highest point of the levee, and basins capable of impounding more than 1000 cubic meters (m^3), shall be designed by a professional Civil Engineer registered with the state of California. The design must be submitted to the Resident Engineer (RE) for approval at least 7 days prior to the basin construction. The design shall include maintenance requirements, including sediment and vegetation removal, to ensure continuous function of the basin outlet and bypass structures.
- Design and locate desilting basins so that they can be maintained. Construct desilting basins prior to the rainy season and construction activities.
- Desilting basins, regardless of size and storage volume, shall include features to accommodate overflow or bypass flows that exceed the design storm event.
- Basins shall be designed to drain within 72 hours following storm events.
- The outflow from the desilting basin shall be provided with outlet protection to prevent erosion and scouring of the embankment and channel.
- Basin shall be located: (1) by excavating a suitable area or where a low embankment can be constructed across a swale, (2) where post-construction (permanent) detention basins will be constructed, (3) where failure would not cause loss of life or property damage, and (4) where the basins can be

* Altered by D-MAX Engineering, Inc.

maintained on a year-round basins to provide access for maintenance, including sediment removal and sediment stockpiling in a protected area, and to maintain the basin to provide the required capacity.

- Basin inlets shall be located to maximize travel distance to the basin outlet.
- Rock or vegetation shall be used to protect the basin inlet and slopes against erosion.
- A forebay, constructed upstream of the basin may be provided to remove debris and larger particles.
- Principal outlet shall consist of a corrugated metal, high density polyethylene (HDPE), or reinforced concrete riser pipe with dewatering holes and an anti-vortex device and trash rack attached to the top of the riser, to prevent floating debris from flowing out of the basin or obstructing the system. This principal structure shall be designed to accommodate the inflow design storm.
- Structure shall be placed on a firm, smooth foundation with the base securely anchored with concrete or other means to prevent floatation.
- Attach riser pipe (watertight connection) to a horizontal pipe (barrel) which extends through the embankment to toe of fill. Provide anti-seep collars on the barrel.
- Cleanout level shall be clearly marked on the riser pipe.
- Avoid dewatering of groundwater to the desilting basin during the rainy season. Insignificant quantities of accumulated precipitation may be dewatered to the desilting basin unless precipitation is forecasted within 24 hours.
- Chain link fencing shall be provided around each desilting basin to prevent unauthorized entry to the basin or if safety is a concern.

* Altered by D-MAX Engineering, Inc.

- One of the dewatering configurations shown below for the principal outlet may be used. The Contractor shall verify that the outlet is properly designed to handle the design and peak flows.

Outlet #1, See Page 6

- Perforate the top one-third of the riser with 13 mm (0.5 in) diameter holes spaced 200 mm (8 in) vertically and 250 mm (10 in) - 300 mm (12 in) horizontally.
- Wrap with well-secured filter fabric.
- Place 19 mm (0.75 in) gravel over perforated holes to approximately 50 mm (2 in) minimum thickness to assist in prevention of clogging of dewatering holes. Gravel will naturally settle into a cone surrounding the riser pipe.

Outlet #2, See Page 7

- Perforate the lower one-half of the riser pipe with 13 mm (0.5 in) diameter holes spaced approximately 75 mm (3 in) apart, in each outside valley (corrugated metal pipe).
- Place 19 mm (0.75 in) gravel over perforated holes to approximately 50 mm (2 in) minimum thickness to assist in prevention of clogging of dewatering holes. Gravel will naturally settle into a cone surrounding the riser pipe.

Outlet #3, See Page 8

- Provide two 25 mm (1 in) diameter holes above the sediment storage volume on opposites sides of the non-perforated riser pipe. This will typically provide sufficient detention time for basins to drain approximately 4 ha (10 ac).
- Construct an emergency spillway to accommodate flows not carried by the principal spillway. Spillway shall consist of an open channel (earthen or vegetated) over undisturbed material (not fill) or constructed of a non-erodible riprap.
- Spillway control section, which is a level portion of the spillway channel at the highest elevation in the channel, shall be a minimum of 6 m (20 ft) in length.
- Use outlet protection at the pipe outlet. See BMP SS-10, "Outlet Protection/Velocity Dissipation Devices".

Maintenance and Inspection

- Inspect temporary desilting basins before and after rainfall events and weekly during the rest of the rainy season. During extended rainfall events, inspect at least every 24 hours.
- Examine basin banks for seepage and structural soundness.
- Check inlet and outlet structures and spillway for any damage or obstructions. Repair damage and remove obstructions as needed, or as directed by the RE.
- Check inlet and outlet area for erosion and stabilize if required, or if directed by the RE.
- Remove sediments when storage zone is one-third full.
- Check fencing for damage and repair as needed or as directed by the RE.

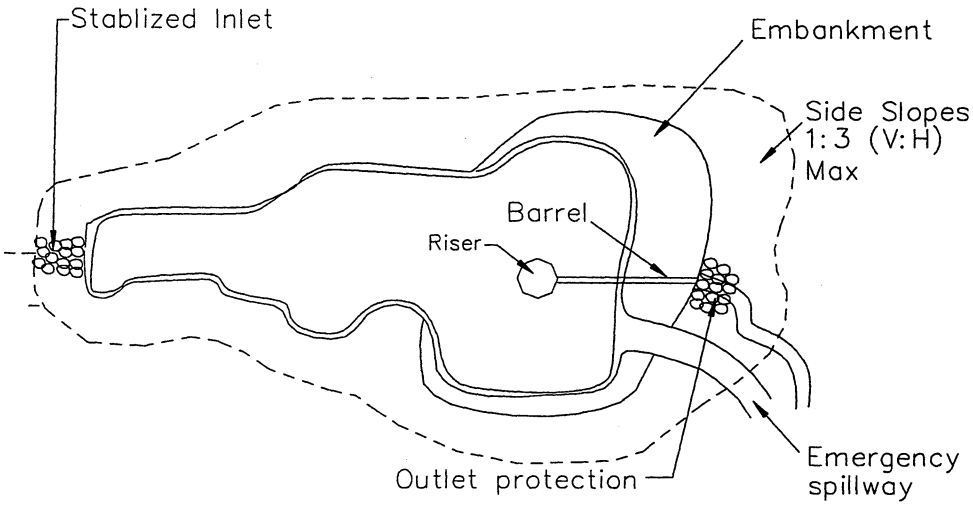

TOP VIEW

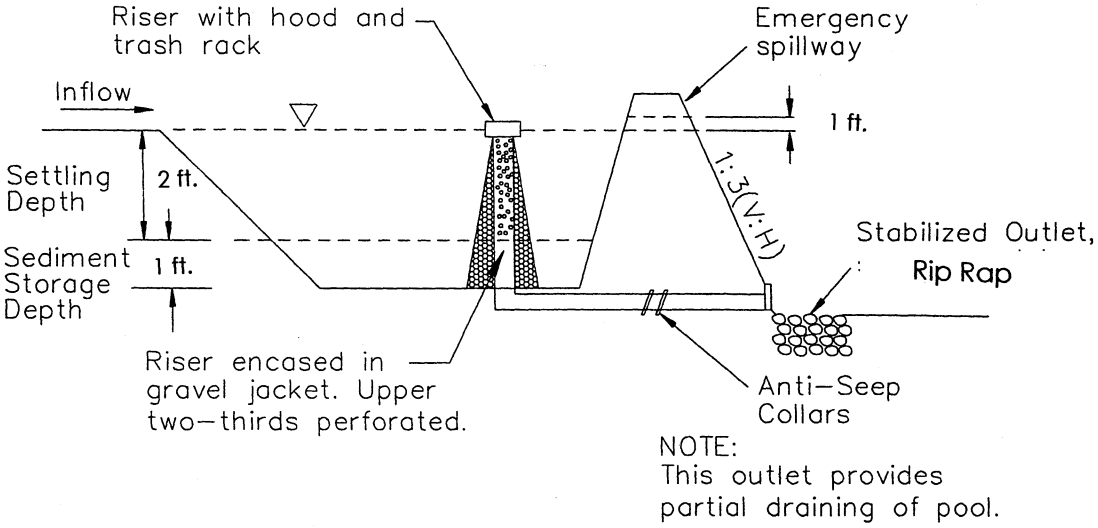

TYPICAL DESILTING BASIN – OUTLET #1

NOT TO SCALE

* Altered by D-MAX Engineering, Inc.

Desilting Basin*

SC-2

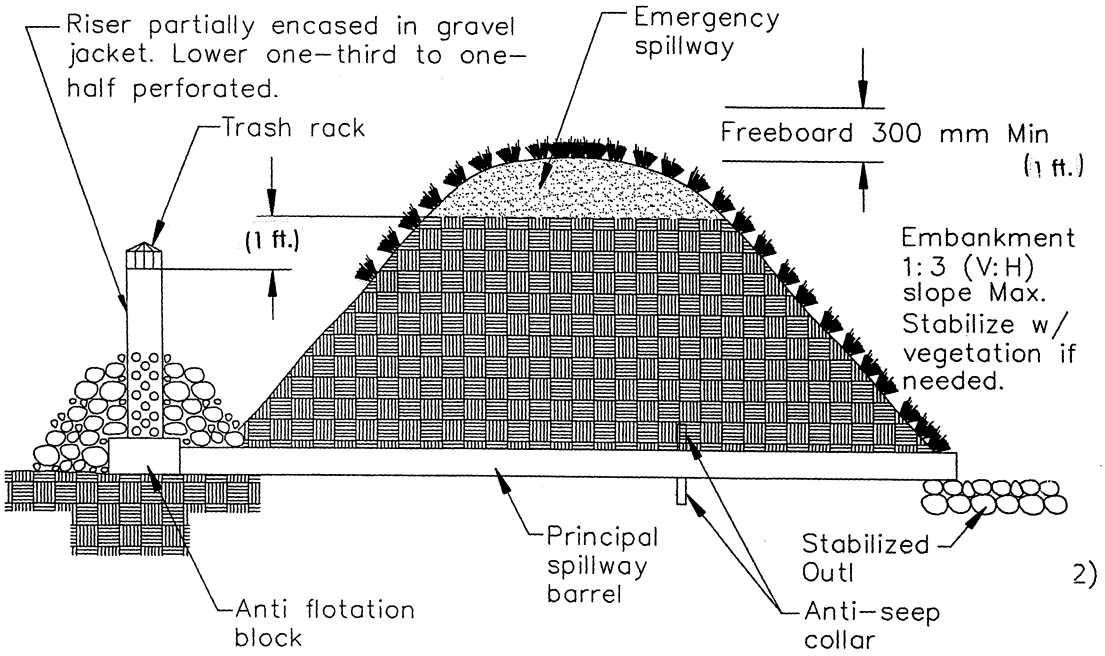

NOTE:
This outlet provides complete draining of pool.

TYPICAL DESILTING BASIN – OUTLET #2

NOT TO SCALE

* Altered by D-MAX Engineering, Inc.

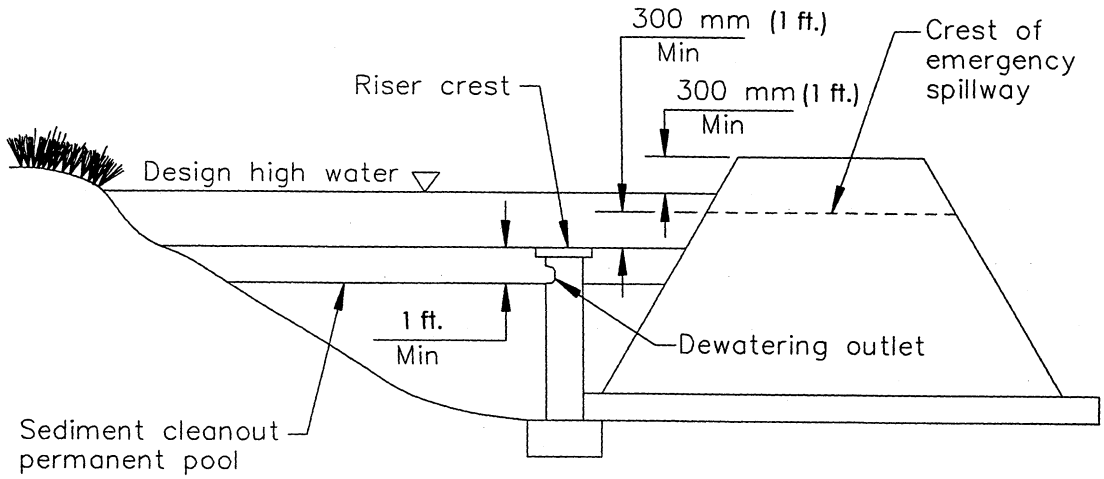

NOTE:
This outlet provides no drainage for permanent pool.

TYPICAL DESILTING BASIN – OUTLET #3
NOT TO SCALE

* Altered by D-MAX Engineering, Inc.

Gravelbag Barrier*

SC-8

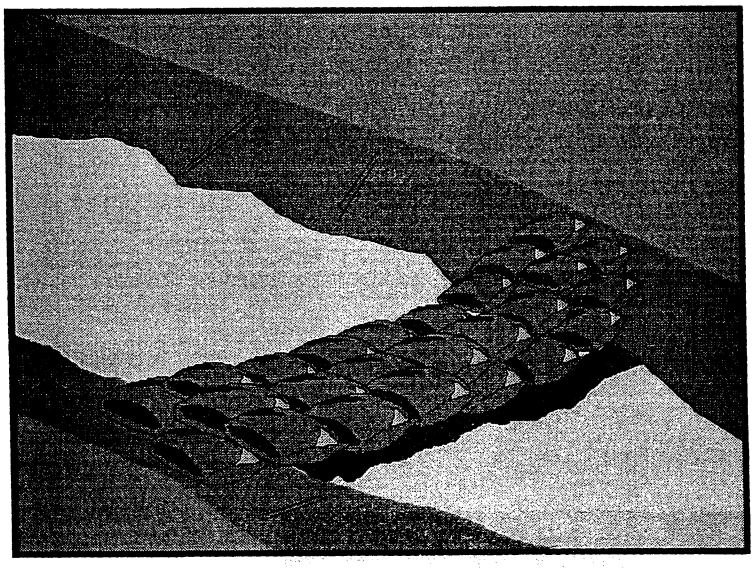

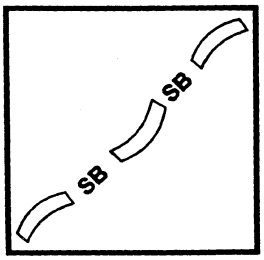

BMP Objectives

- ○ Soil Stabilization
- ● Sediment Control
- ○ Tracking Control
- ○ Wind Erosion Control
- ○ Non-Storm Water Management
- ○ Materials and Waste Management

Definition and Purpose

A gravelbag barrier is a temporary linear sediment barrier consisting of stacked gravelbags, designed to intercept and slow the flow of sediment-laden sheet flow runoff. Gravelbag barriers allow sediment to settle from runoff before water leaves the construction site. Gravelbags can also be used where flows are moderately concentrated, such as ditches, swalves, and storm drain inlets (see BMP SC-10, Storm Drain Inlet Protection) to divert and/or detain flows.

Appropriate Applications

- Along the perimeter of a site.
- Along streams and channels.
- Below the toe of exposed and erodible slopes.
- Down slope of exposed soil areas.
- Around stockpiles.
- Across channels to serve as a barrier for utility trenches or provide a temporary channel crossing for construction equipment, to reduce stream impacts.
- Parallel to a roadway to keep sediment off paved areas.
- At the top of slopes to divert roadway runoff away from disturbed slopes.
- To divert or direct flow or create a temporary sediment basin.
- During construction activities in stream beds when the contributing drainage area is less than 2 ha (5 ac).

- When extended construction period limits the use of either silt fences or rice straw bale barriers.
- Along the perimeter of vehicle and equipment fueling and maintenance areas or chemical storage areas.
- To capture and detain non-storm water flows until proper cleaning operations occur.
- When site conditions or construction sequencing require adjustments or relocation of the barrier to meet changing field conditions and needs during construction.
- To temporarily close or continue broken, damaged or incomplete curbs.
- This BMP may be implemented on a project-by-project basis in addition to other BMPs when determined necessary and feasible by the Resident Engineer (RE).

Limitations

- Limit the drainage area upstream of the barrier to 2 ha (5 ac).
- Degraded gravelbags may rupture when removed, spilling gravel.
- Installation can be labor intensive.
- Limited durability for long term projects.
- When used to detain concentrated flows, maintenance requirements increase.

Standards and Specifications

Installation

- When used as a linear control for sediment removal:
  - Install along a level contour.
  - Turn ends of gravelbag row up slope to prevent flow around the ends.
  - Generally, gravelbag barriers shall be used in conjunction with temporary soil stabilization controls up slope to provide effective control.
  - Install as shown in Page 4 of this BMP.

* Altered by D-MAX Engineering, Inc.

- When used for concentrated flows:
  - Stack gravelbags to required height using a pyramid approach as shown Page 4 of this BMP.
  - Upper rows of gravelbags shall overlap joints in lower rows.
- Construct gravelbags barriers with a set-back of at least 1 m from the toe of a slope. Where it is determined to be not practicable due to specific site conditions, the gravelbag barrier may be constructed at the toe of the slope, but shall be constructed as far from the toe of the slope as practicable.

Maintenance and Inspection

- Inspect gravelbag barriers before and after each rainfall event, and weekly throughout the rainy season.
- Reshape or replace gravelbags as needed, or as directed by the RE.
- Repair washouts or other damages as needed, or as directed by the RE.
- Inspect gravelbag barriers for sediment accumulations and remove sediments when accumulation reaches one-third the barrier height. Removed sediment shall be incorporated in the project at locations designated by the RE.
- Remove gravelbags when no longer needed, remove sediment accumulation, and clean , re-grade and stabilized the area.

* Altered by D-MAX Engineering, Inc.

Gravelbag Barrier*

SC-8

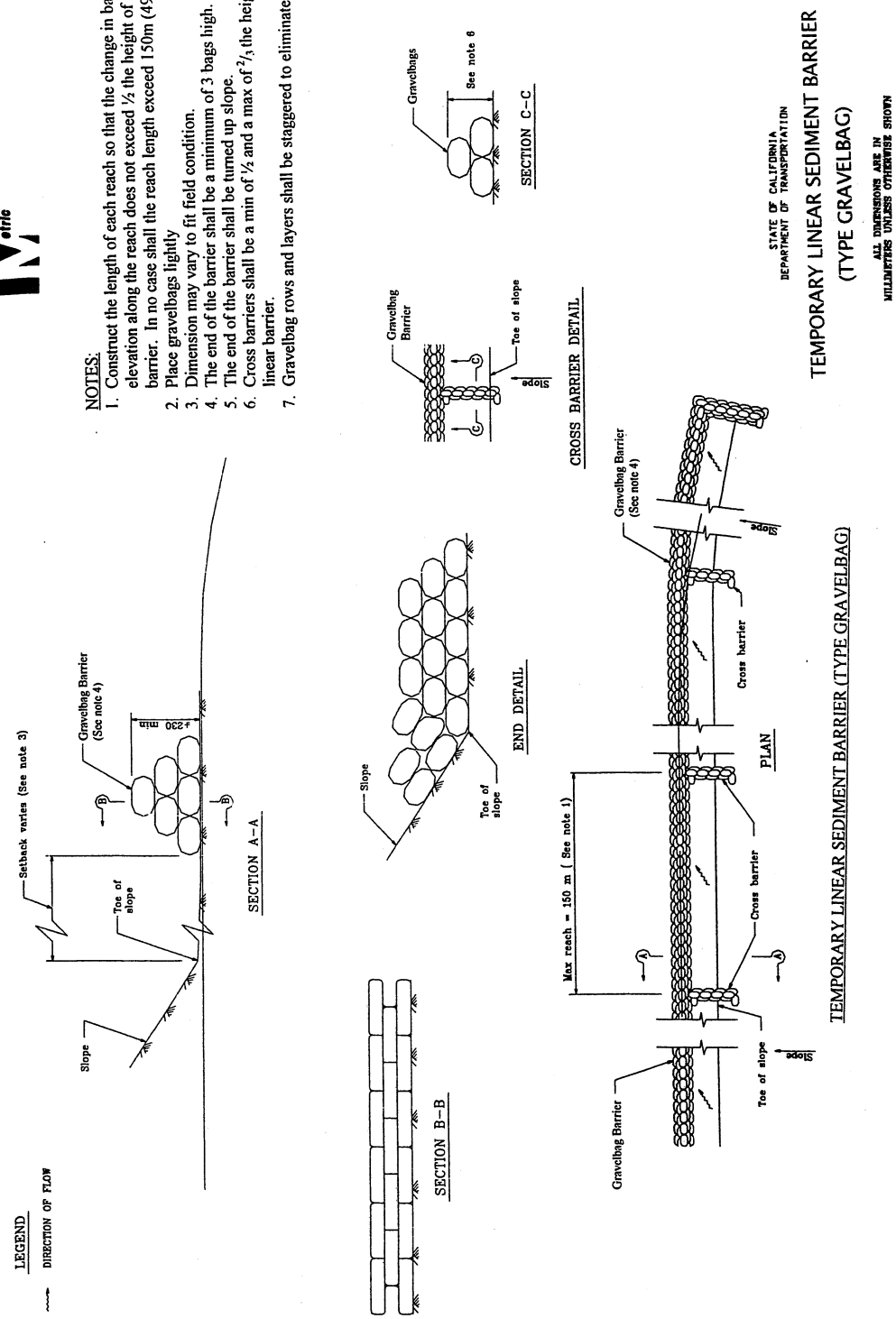

* Altered by D-MAX Engineering, Inc.

Stabilized Construction Entrance/Exit TC-1

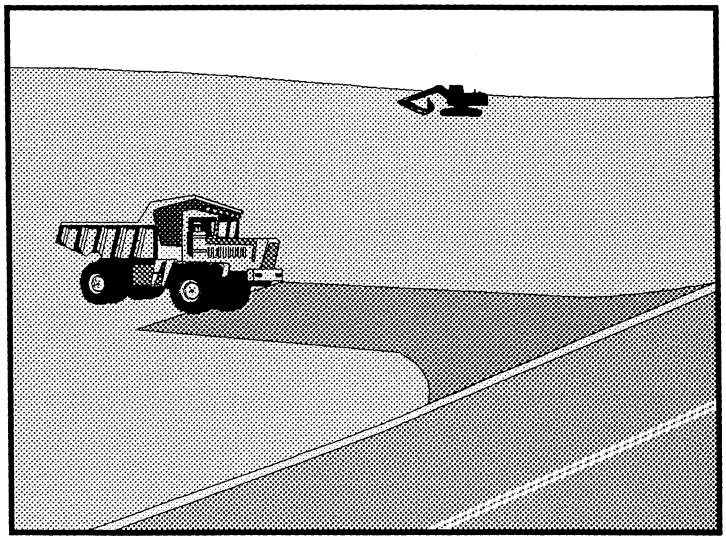

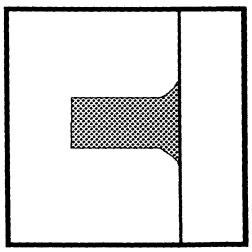

BMP Objectives

- Soil Stabilization
- Sediment Control
- Tracking Control
- Wind Erosion Control
- Non-Storm Water Management
- Materials and Waste Management

Definition and Purpose

A stabilized construction access is a defined point of entrance/exit to a construction site that is stabilized to reduce the tracking of mud and dirt onto public roads by construction vehicles.

Appropriate Applications

- Use at construction sites:
  - where dirt or mud is tracked onto public roads
  - adjacent to water bodies
  - where poor soils are encountered
  - where dust is a problem during dry weather conditions.
- This BMP may be implemented on a project-by-project basis in addition to other BMPs when determined necessary and feasible by the Resident Engineer (RE).

Limitations

- Site conditions will dictate design and need.

Standards and Specifications

- Limit the points of entrance/exit to the construction site.
- Limit speed of vehicles to control dust.
- Properly grade each construction entrance/exit to prevent runoff from leaving the construction site.
- Route runoff from stabilized entrances/exits through a sediment-trapping device before discharge.

- Design stabilized entrance/exit to support heaviest vehicles and equipment that will use it.
- Select construction access stabilization (aggregate, asphaltic concrete, concrete) based on longevity, required performance, and site conditions. The use of asphalt concrete (AC) grindings for stabilized construction access/roadway is not allowed.
- Use of constructed or constructed/manufactured steel plates with ribs for entrance/exit access is allowed with written approval of the RE.
- If aggregate is selected, place crushed aggregate over geotextile fabric to at least 300 mm (12 in) depth, or place aggregate to a depth recommended by a geotechnical engineer. A crushed aggregate greater than 75 mm (3 inches) but smaller than 150 mm (6 inches) shall be used.
- Designate combination or single purpose entrances and exits to the construction site. Require all employees, subcontractors and others to use them.
- Require that all employees, subcontractors, and suppliers utilize the stabilized construction access.

Maintenance and Inspection

- Inspect routinely for damage and assess effectiveness of the BMP. Repair if access is clogged with sediment or as directed by the RE.
- Keep all temporary roadway ditches clear.
- Public safety shall be considered when this BMP is used to keep rocks from entering the sidewalk and traveled way.

* Altered by D-MAX Engineering, Inc.

Stabilized Construction Entrance/Exit* TC-1

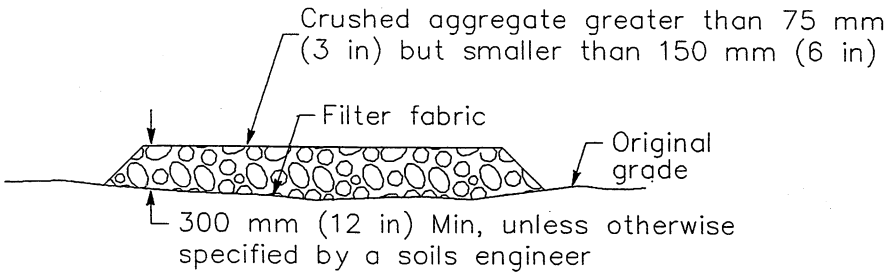

SECTION B–B
NTS

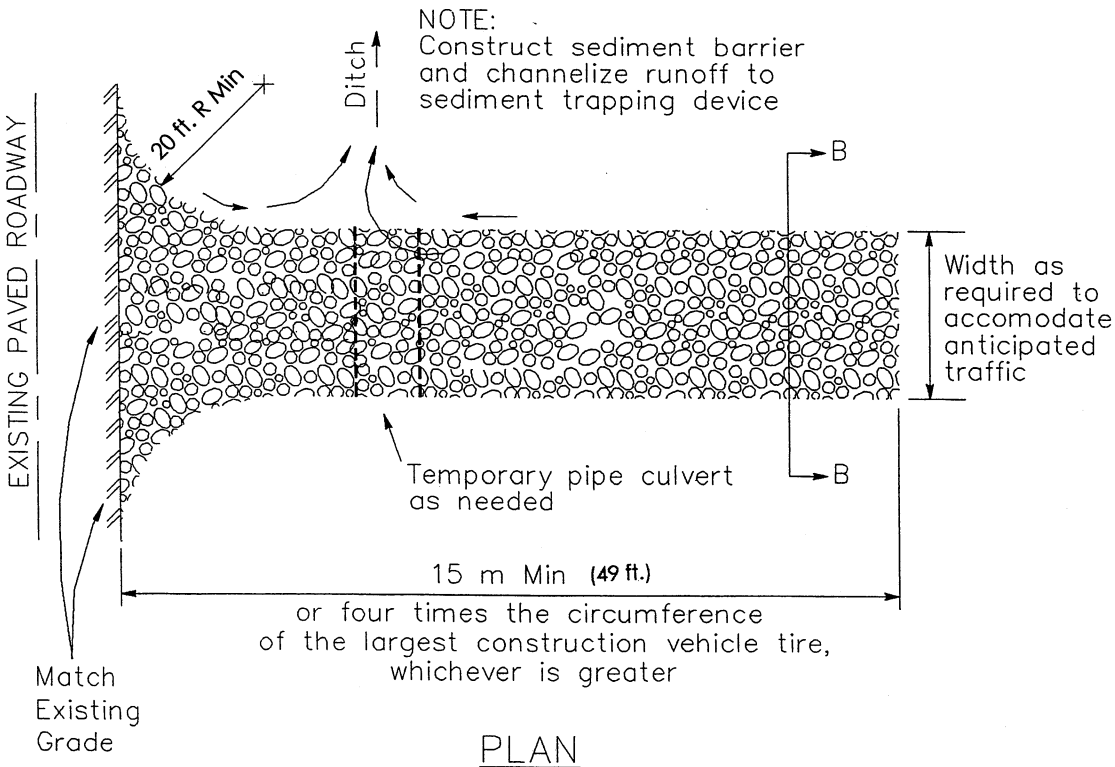

PLAN
NTS

Stabilized Construction Entrance/Exit (Type 1)

* Altered by D-MAX Engineering, Inc.

Stabilized Construction Entrance/Exit* TC-1

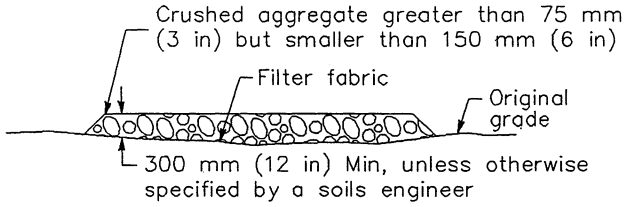

SECTION B–B
NTS

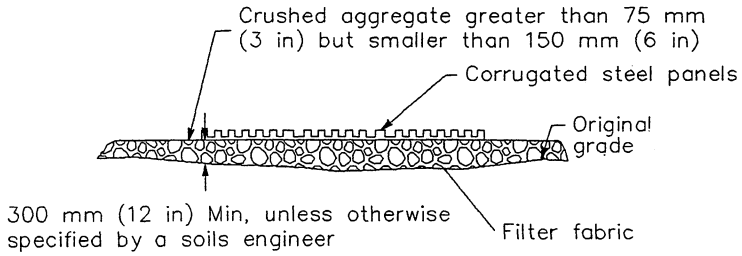

SECTION A–A
NOT TO SCALE

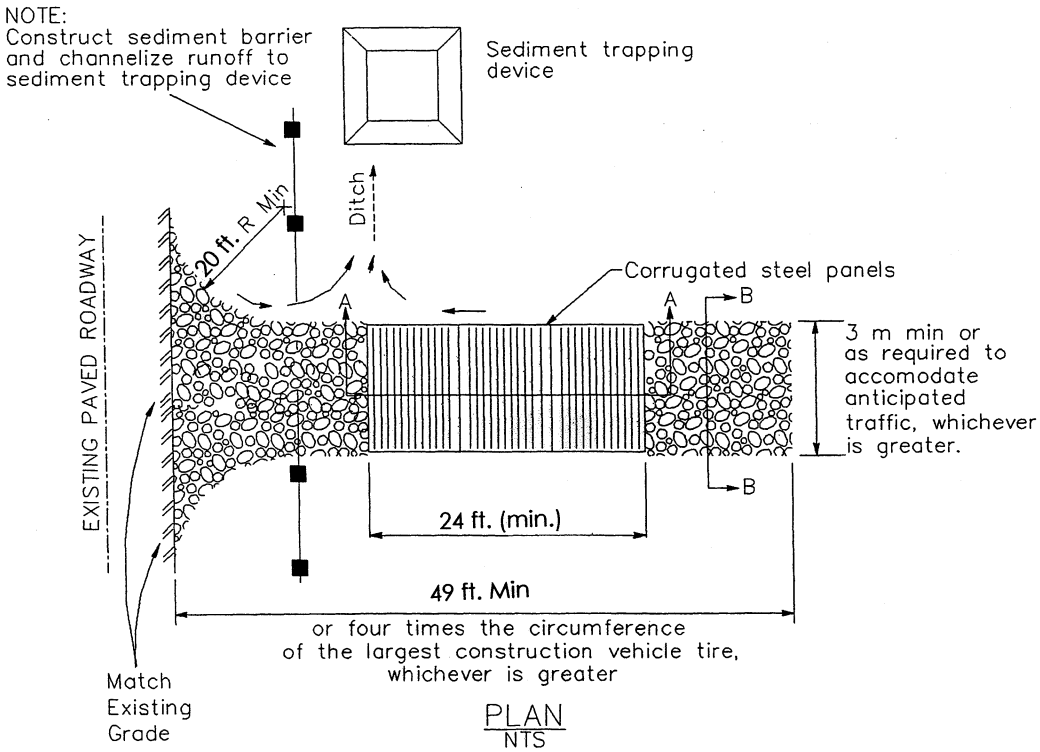

PLAN
NTS

Stabilized Construction Entrance/Exit (Type 2)

Stabilized Construction Roadway

TC-2

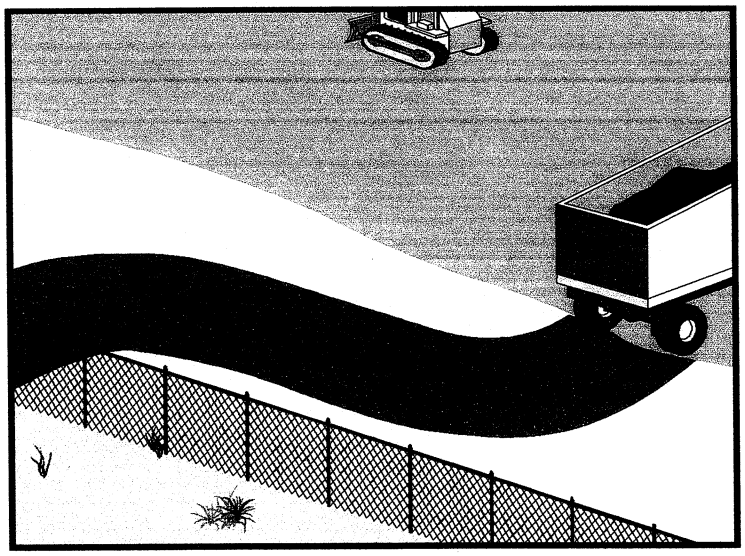

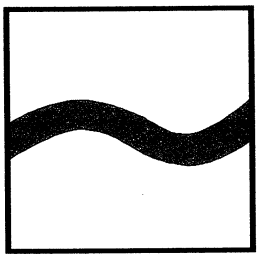

BMP Objectives

- Soil Stabilization
- Sediment Control
- Tracking Control
- Wind Erosion Control
- Non-Storm Water Management
- Materials and Waste Management

Definition and Purpose

A stabilized construction roadway is a temporary access road connecting existing public roads to a remote construction area. It is designed for the control of dust and erosion created by vehicular tracking.

Appropriate Applications

- Construction roadways and short-term detour roads:
  - Where mud tracking is a problem during wet weather
  - Where dust is a problem during dry weather
  - Adjacent to water bodies
  - Where poor soils are encountered
- This BMP may be implemented on a project-by-project basis with other BMPs when determined necessary and feasible by the Resident Engineer (RE).

Limitations

- Materials will likely need to be removed prior to final project grading and stabilization.
- Site conditions will dictate design and need.
- May not be applicable to very short duration projects.
- Limit speed of vehicles to control dust.

Stabilized Construction Roadway

TC-2

Standards and Specifications

- Properly grade roadway to prevent runoff from leaving the construction site.
- Design stabilized access to support heaviest vehicles and equipment that will use it.
- Stabilize roadway using aggregate, asphalt concrete, or concrete based on longevity, required performance, and site conditions. The use of cold mix asphalt or asphalt concrete (AC) grindings for stabilized construction roadway is not allowed.
- Coordinate materials with those used for stabilized construction entrance/exit points.
- If aggregate is selected, place crushed aggregate over geotextile fabric to at least 300 mm (12 in) depth, or place aggregate to a depth recommended by a geotechnical engineer. A crushed aggregate greater than 75 mm (3 inches) but smaller than 150 mm (6 inches) shall be used.

Maintenance and Inspection

- Inspect routinely for damage and repair as needed, or as directed by the Resident Engineer (RE).
- Keep all temporary roadway ditches clear.
- When no longer required, remove stabilized construction roadway and re-grade and repair slopes.

Entrance/Outlet Tire Wash *

TC-3

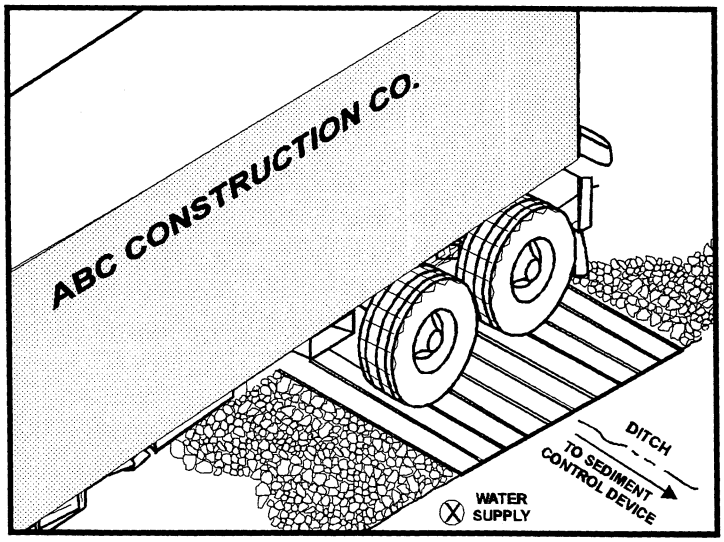

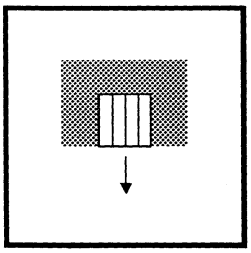

BMP Objectives

- Soil Stabilization
- Sediment Control
- Tracking Control
- Wind Erosion Control
- Non-Storm Water Management
- Materials and Waste Management

Definition and Purpose

A tire wash is an area located at stabilized construction access points to remove sediment from tires and under carriage, and to prevent sediment from being transported onto public roadways.

Appropriate Applications

- Tire washes may be used on construction sites where dirt and mud tracking onto public roads by construction vehicles may occur.
- This BMP may be implemented on a project-by-project basis in addition to other BMPs when determined necessary and approved by the Resident Engineer (RE).

Limitations

- Requires a supply of wash water.
- Requires a turnout or double wide exit in order to keep entering vehicles from having to drive through the wash area.

Standards and Specifications

- Incorporate with a stabilized construction entrance/Exit. See BMP TC-1, "Stabilized Construction Entrance/Exit".
- Construct on level ground when possible, on a pad of coarse aggregate, greater than 75 mm (3 inches) but smaller than 150 mm (6 inches).
- Wash rack shall be designed and constructed/manufactured for anticipated traffic loads.
- Provide a drainage ditch that will convey the runoff from the wash area to a sediment sump device. The drainage ditch shall be of sufficient grade, width, and depth to carry the wash runoff.

* Altered by D-MAX Engineering, Inc.

- Require that all employees, subcontractors, and others that leave the site with mud-caked tires and/or undercarriages use the wash facility.
- Constructed/Manufactured steel-ribbed plates may be used in lieu of rock.

Maintenance and Inspection

- Remove accumulated sediment in wash rack and/or sediment sump to maintain system performance.
- Inspect routinely for damage and repair as needed.

Entrance/Outlet Tire Wash*

TC-3

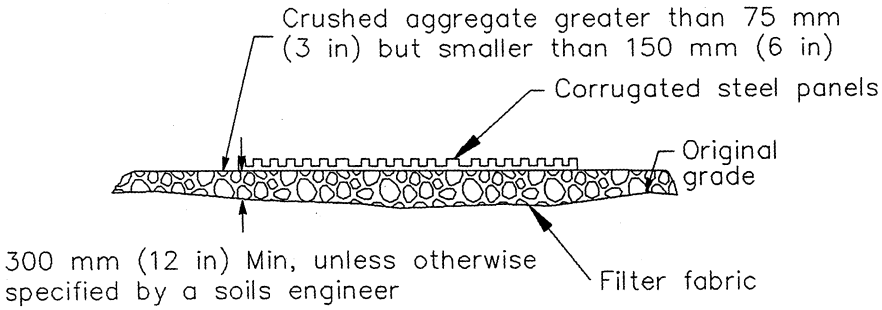

SECTION A–A
NOT TO SCALE

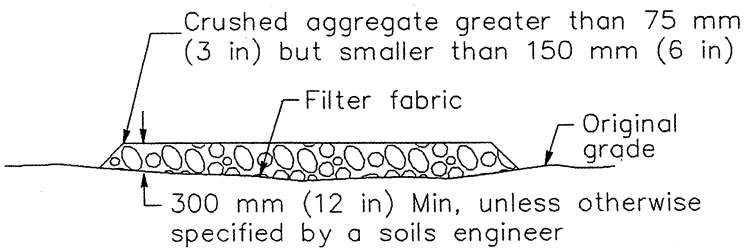

SECTION B–B
NTS

NOTE:
Gravel placement must not adversely affect pedestrian traffic.

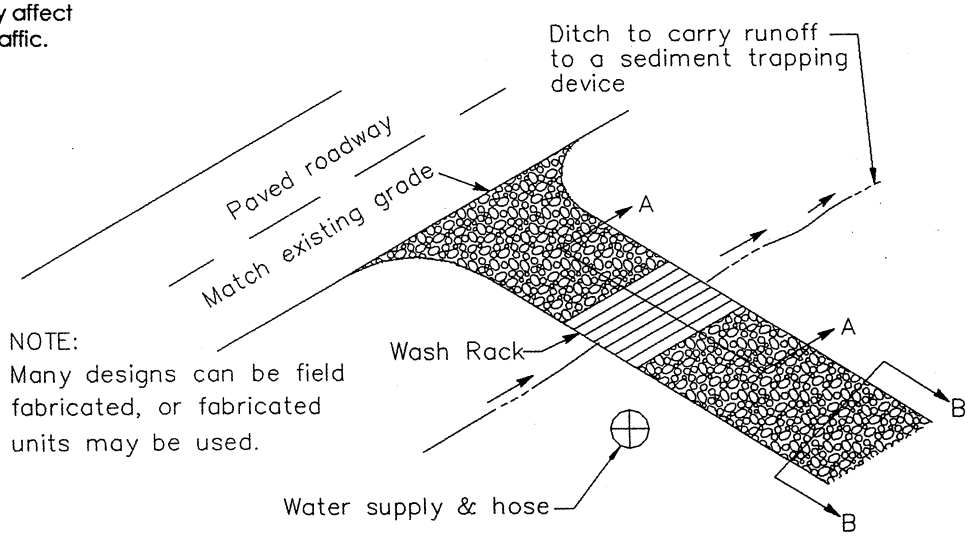

NOTE:
Many designs can be field fabricated, or fabricated units may be used.

TYPICAL TIRE WASH
NOT TO SCALE

* Altered by D-MAX Engineering, Inc.

Street Sweeping and Vacuuming*

SC-7

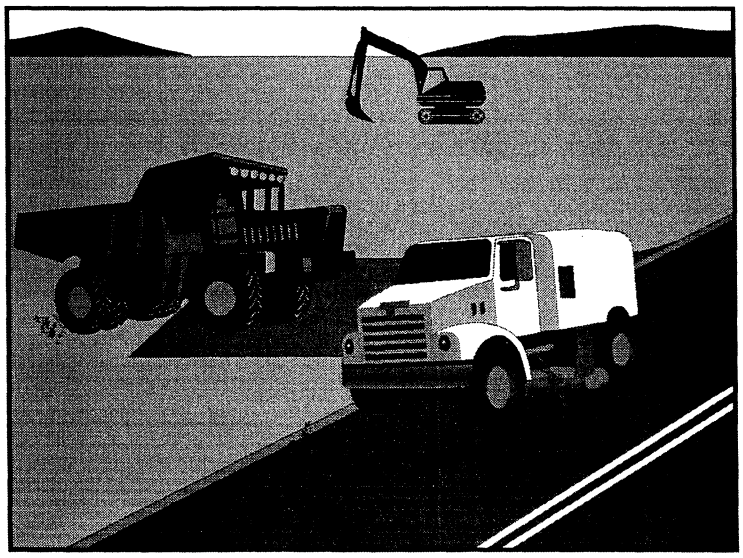

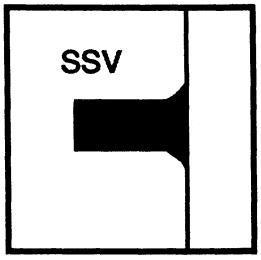

BMP Objectives

- Soil Stabilization
- Sediment Control
- Tracking Control
- Wind Erosion Control
- Non-Storm Water Management
- Materials and Waste Management

Definition and Purpose

Practices to remove tracked sediment to prevent the sediment from entering a storm drain or watercourse.

Appropriate Applications

These practices are implemented anywhere sediment is tracked from the project site onto public or private paved roads, typically at points of egress.

Limitations

Sweeping and vacuuming may not be effective when soil is wet or muddy.

Standards and Specifications

- Do not use kick brooms or sweeper attachments.
- Inspect potential sediment tracking locations daily.
- Visible sediment tracking shall be swept and vacuumed on a daily basis.
- If not mixed with debris or trash, consider incorporating the removed sediment back into the project.

Maintenance and Inspection

- Inspect ingress/egress access points daily and sweep tracked sediment as needed, or as required by the Resident Engineer (RE).
- Be careful not to sweep up any unknown substance or any object that may be potentially hazardous.
- Adjust brooms frequently; maximize efficiency of sweeping operations.
- After sweeping is finished, properly dispose of sweeper wastes at an approved dumpsite .

* Altered by D-MAX Engineering, Inc.